EMITTER-STABILIZED

BJT DC BIASING

prepared by:

Gyro A. Madrona

Electronics Engineer

GRADING SYSTEM

FINAL GRADE

30%	30%	**40%**
PRELIM	MIDTERM	ENDTERM

TERM GRADE

50%

WEEKLY

50%

EXAM

100%

LABORATORY

PENALTY

0

ABSENT

3

45-min LATE

7 max

15-min LATE

TOPIC OUTLINE

Emitter-Stabilized Bias Circuit

- Base-Emitter Loop
- Collector-Emitter Loop
- Load Line Analysis

EMITTER-STABILIZED BIAS CIRCUIT

BASE-EMITTER LOOP

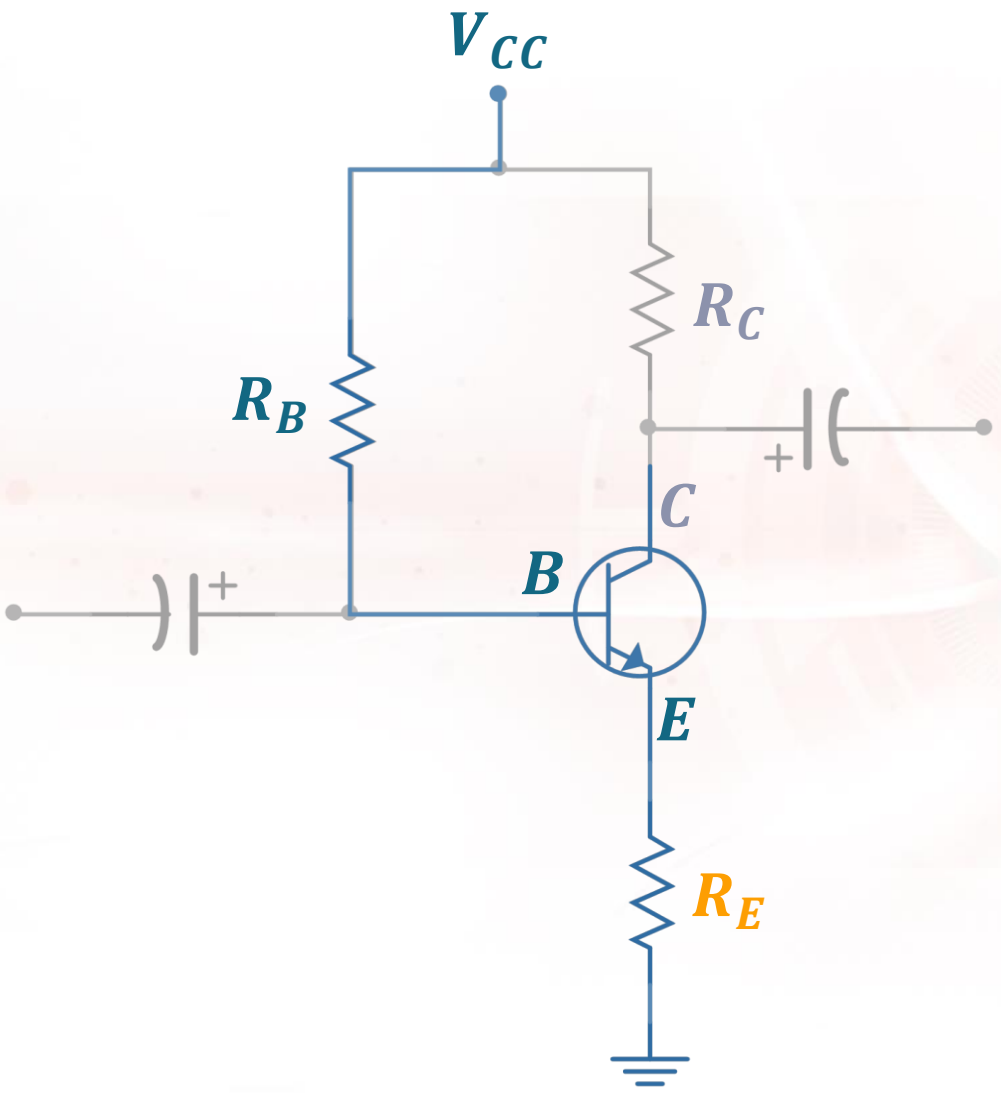

KVL @ B-E,

$$i_B = \frac{V_{CC} - v_{BE}}{R_B + (\beta + 1)R_E}$$

COLLECTOR-EMITTER LOOP

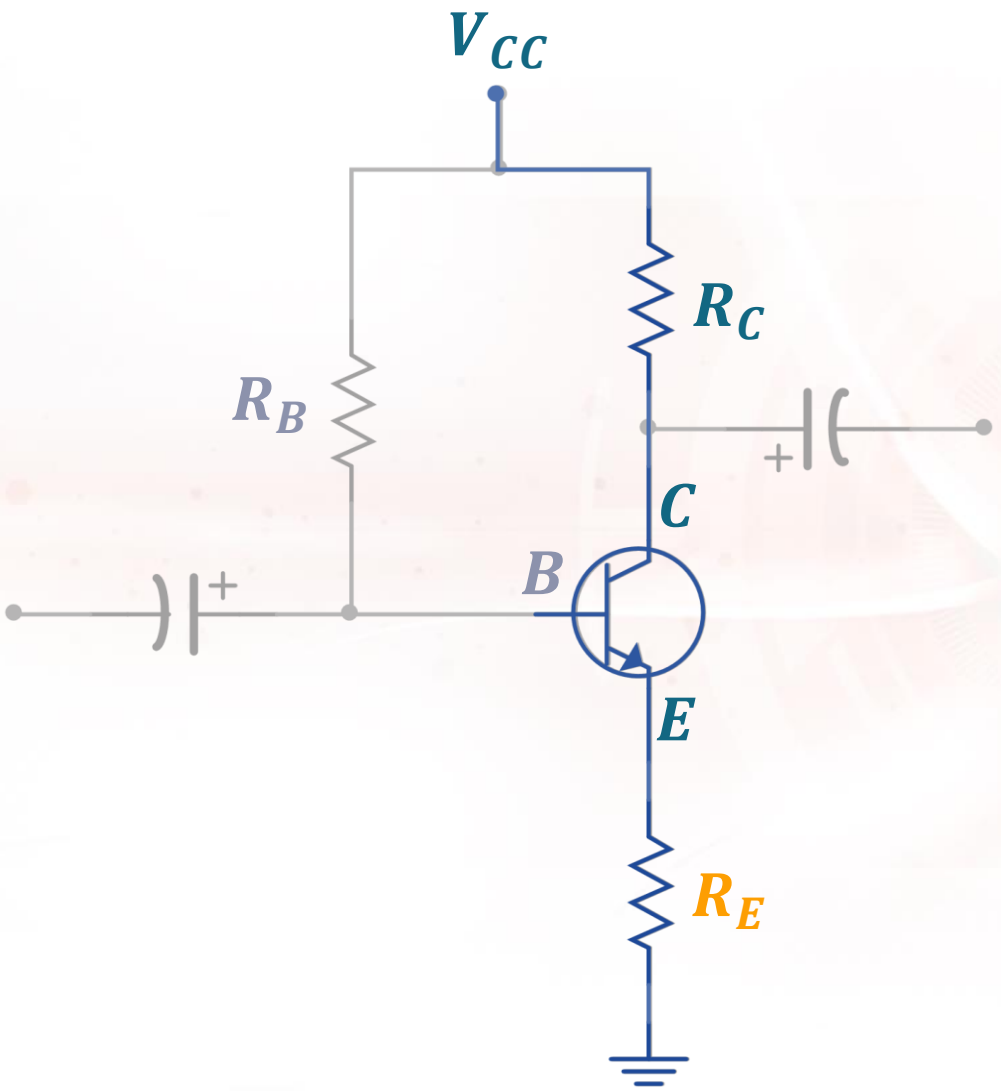

KVL @ C-E,

$$v_{CE} = V_{CC} - i_C(R_C + R_E)$$

For the given **emitter bias** network, determine:

i_B

i_C

v_{CE}

v_C

v_E

v_B

v_{BC}

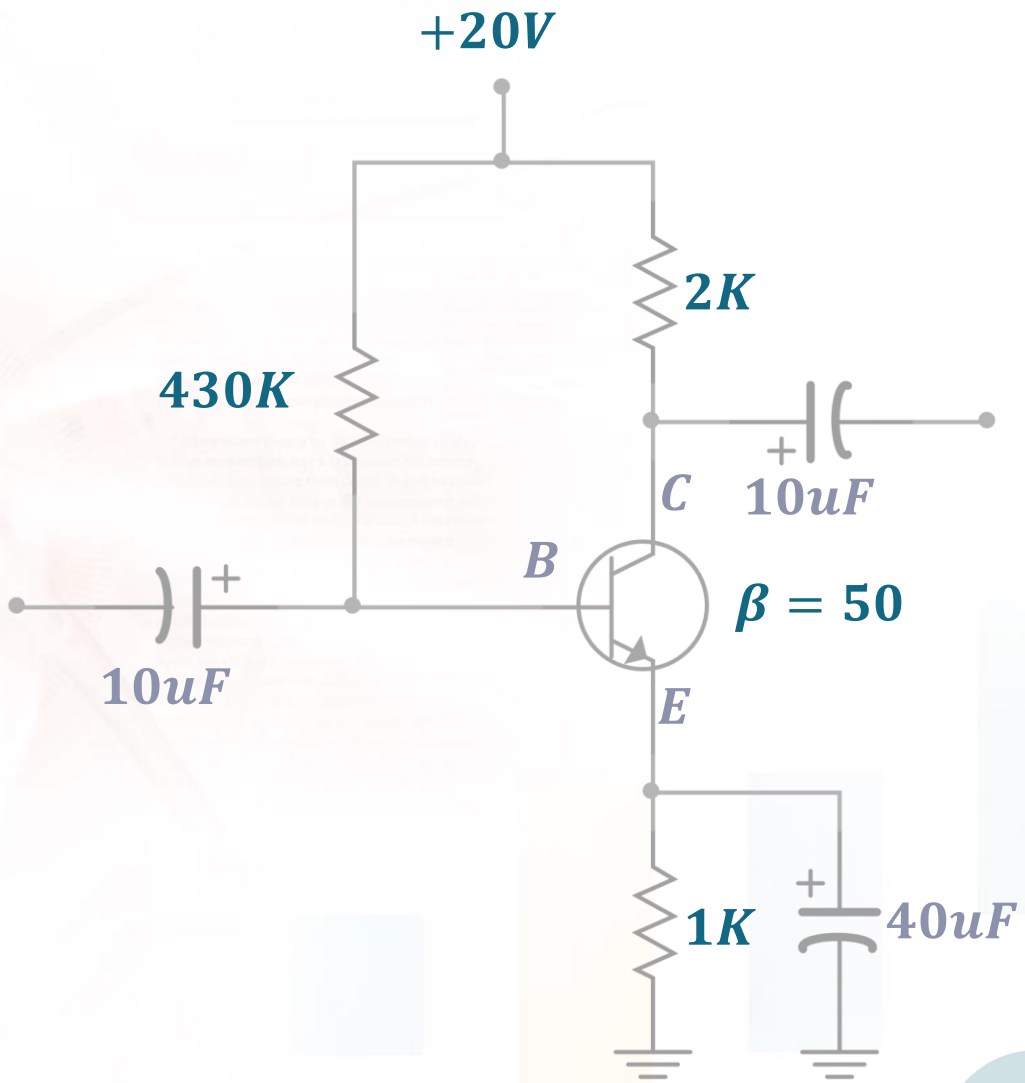

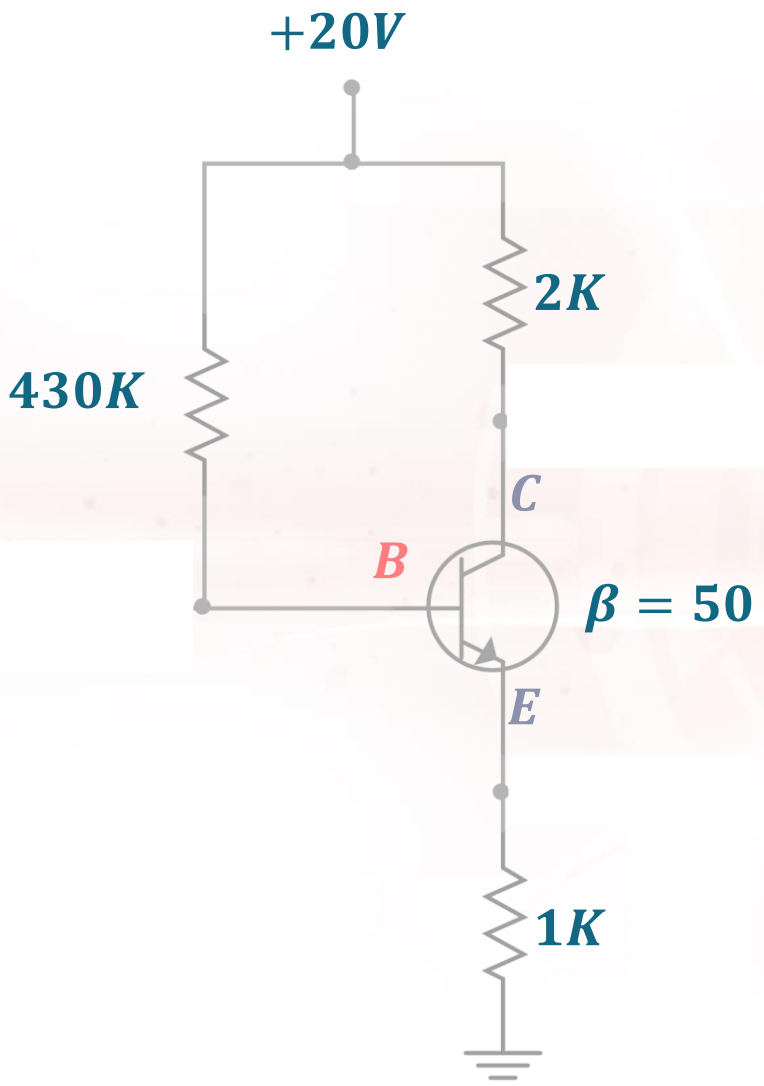
+20V
2K
430K
C
B
β = 50
E
1K

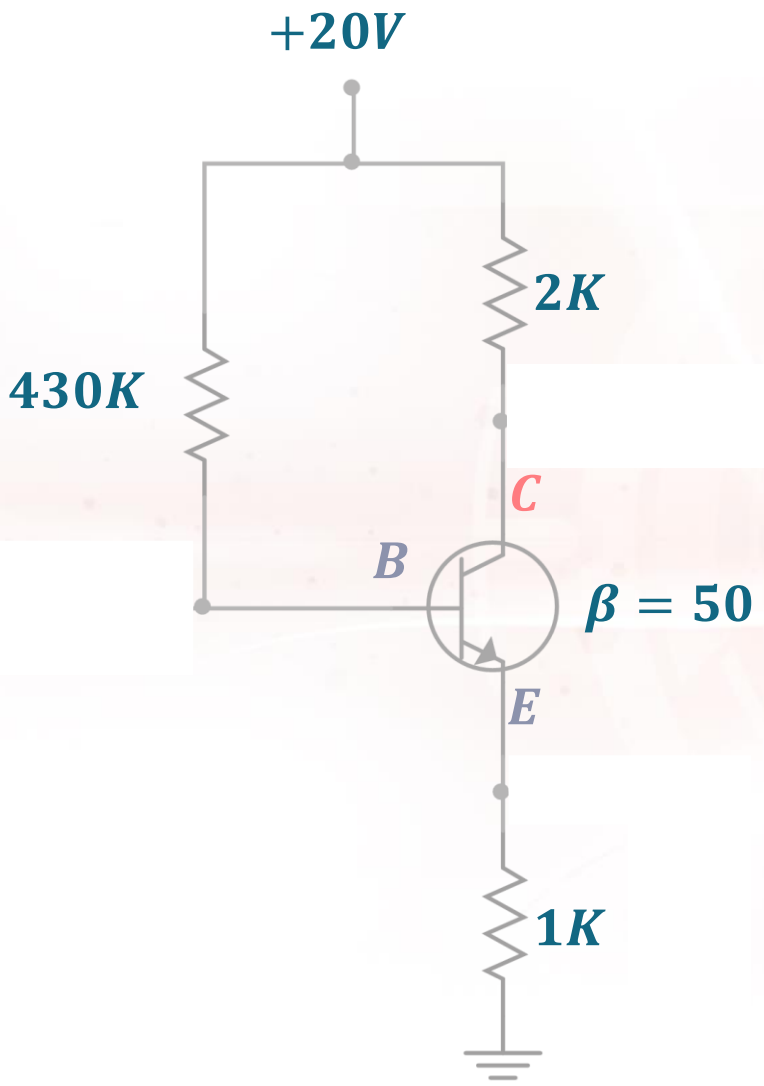
+20V
2K
430K
C
B
β = 50
E
1K

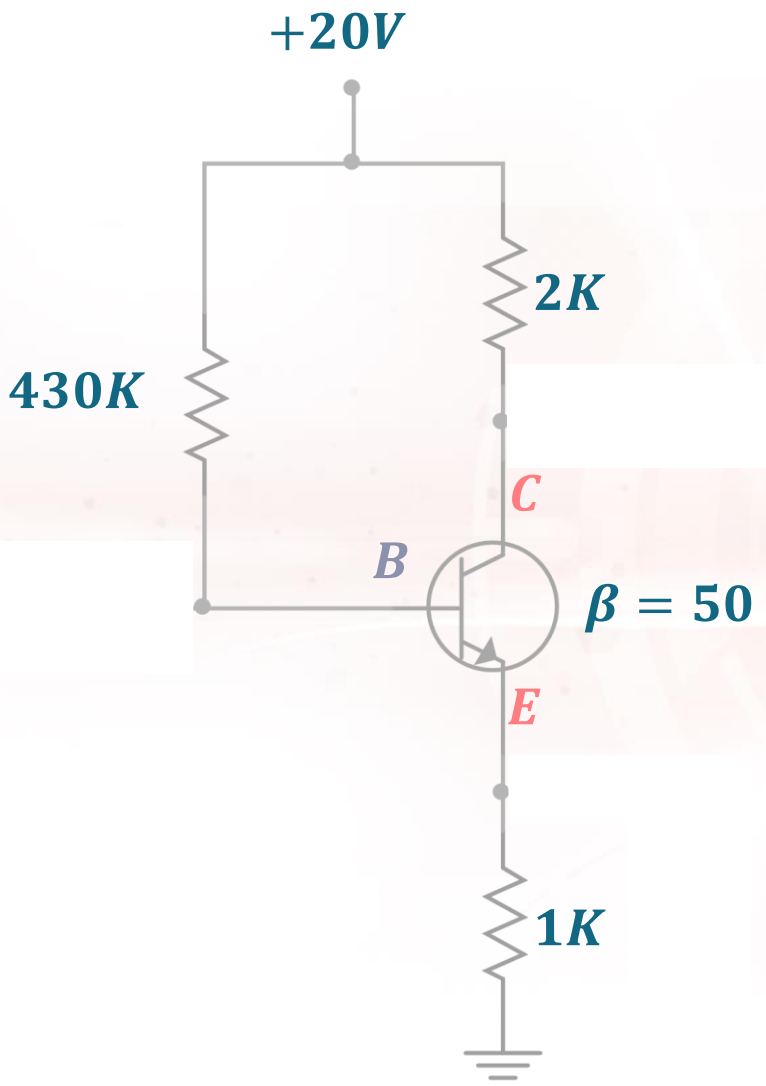
+20V
2K
430K
C
B
β = 50
E
1K

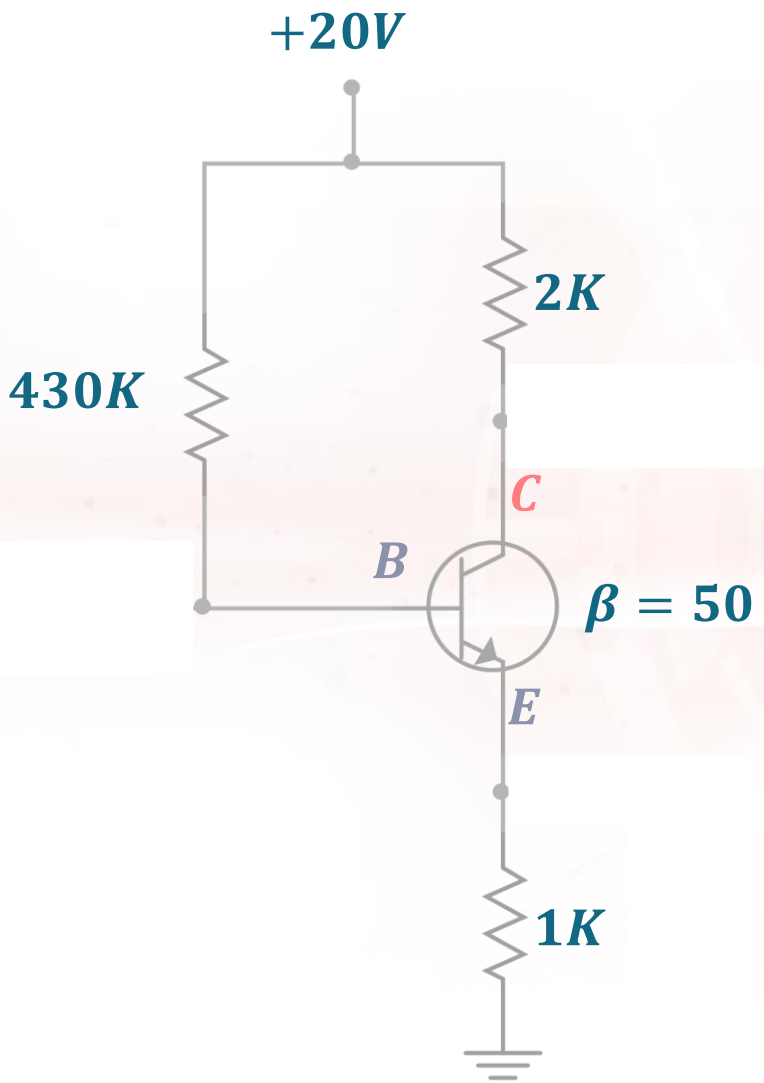
+20V
2K
430K
C
B
β = 50
E
1K

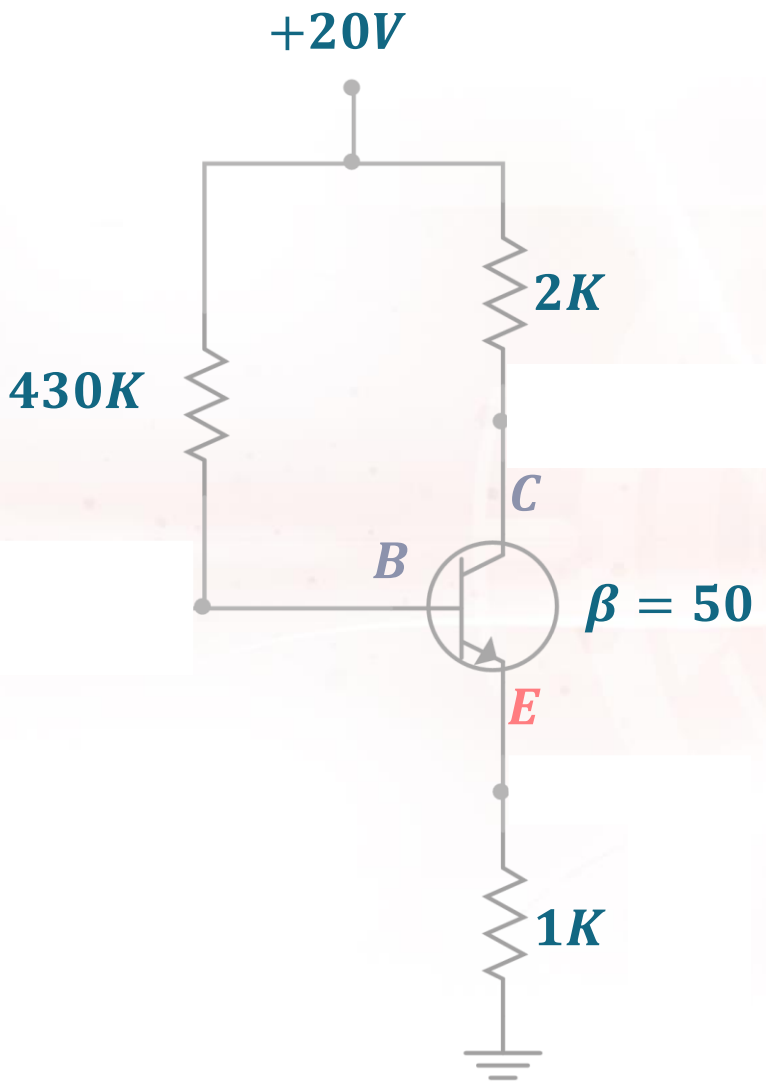
+20V
2K
430K
C
B
β = 50
E
1K

v_{B-}

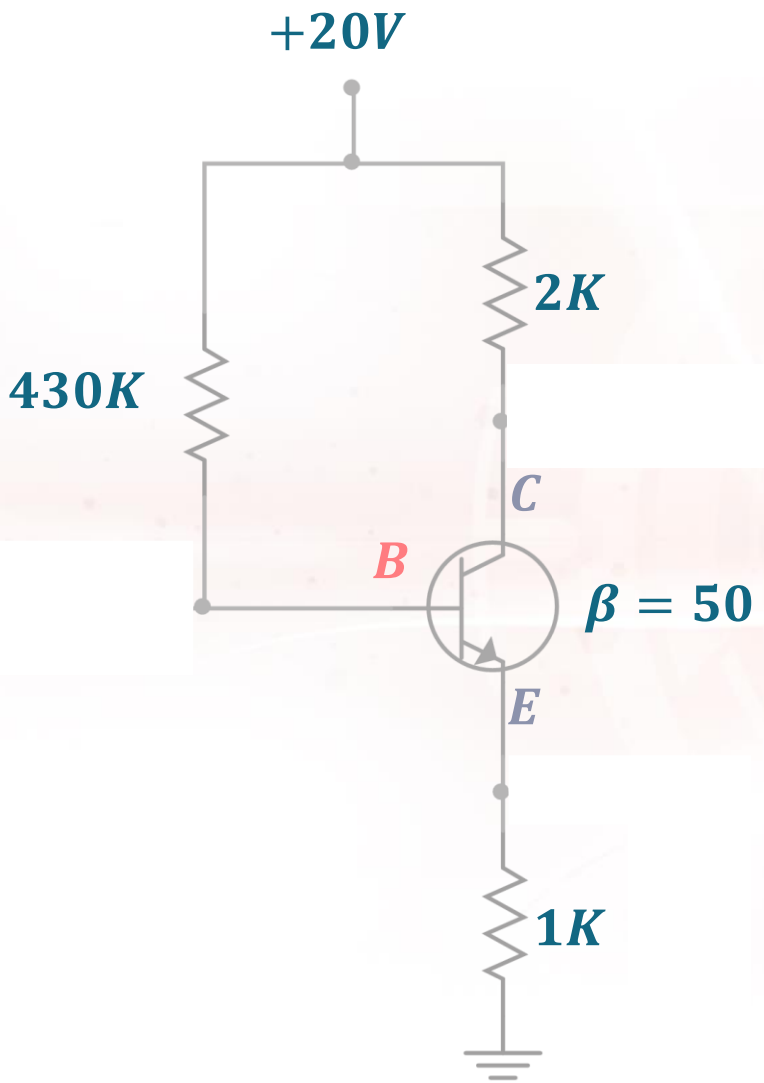

v_{BC-}

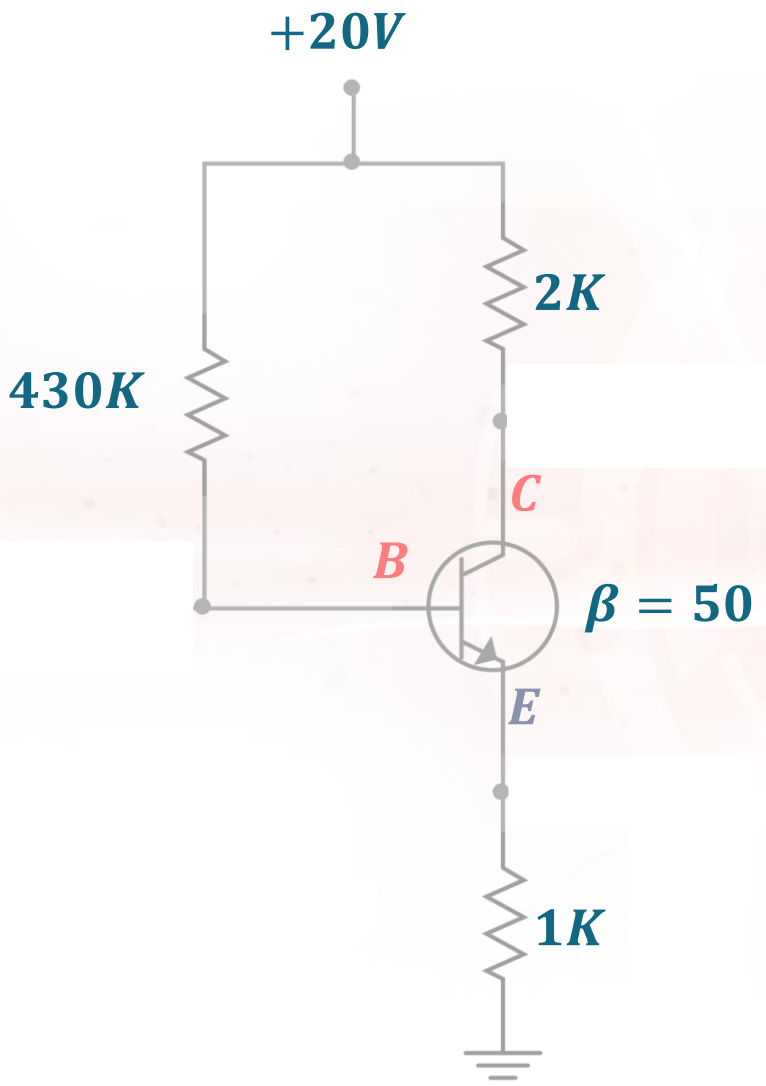

SATURATION POINT

"Mental **Short**"

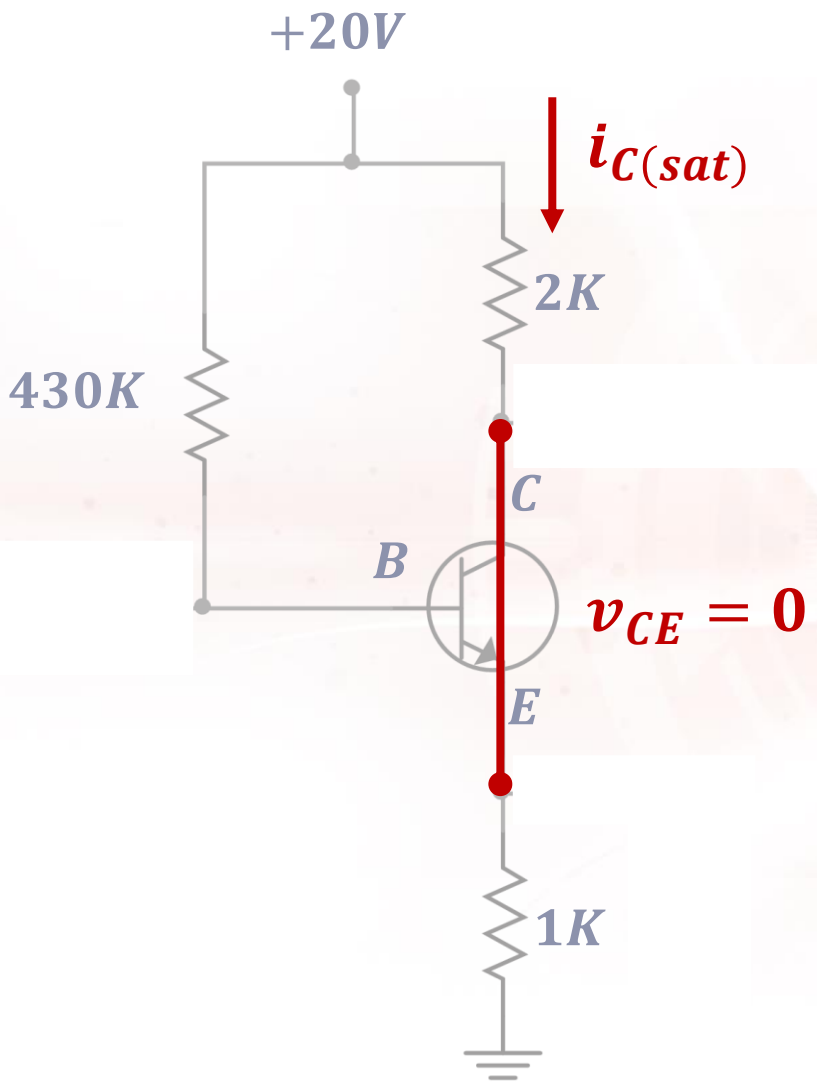

CUTOFF POINT

"Mental Open"

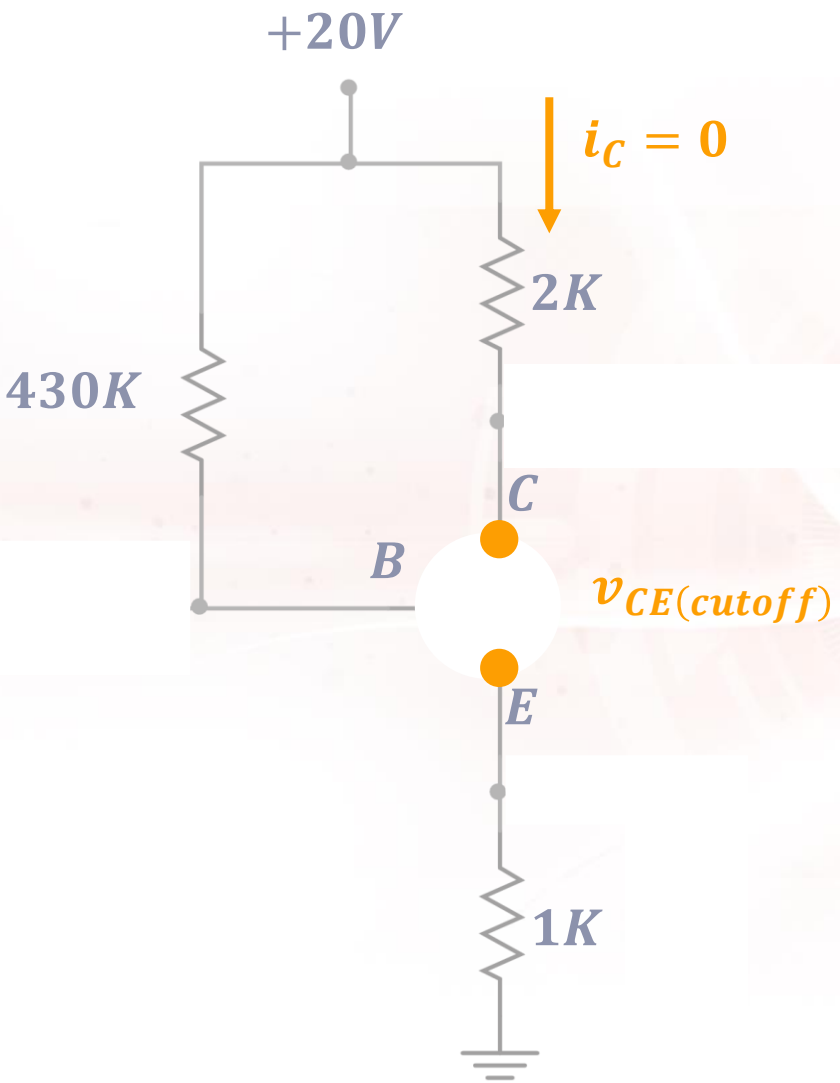

LOAD LINE ANALYSIS

IMPROVED BIAS STABILITY

Bias	β	$i_B(\mu A)$	$i_C(mA)$	$V_{CE}(V)$	$\%\Delta V_{CE}$
Fixed-Biased	50	47.1	2.3	6.8	-76%
	100	47.1	4.7	1.6	
Emitter Stabilized	**50**	**40.1**	**2.0**	**14.0**	**-35%**
	100	**36.3**	**3.6**	**9.1**	

LABORATORY